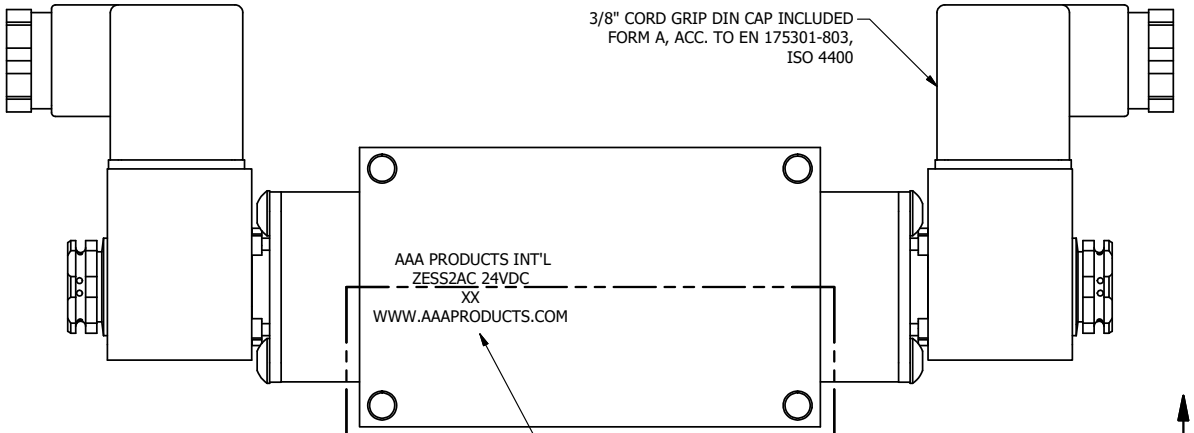

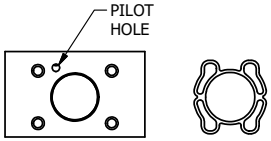

ALIGN PILOT AND SLOT IN ADAPTOR
WITH GASKET IN BETWEEN, BOTH SIDES
FOR EXTERNAL PILOT OPERATION - ROTATE ADAPTOR
180 DEGREES. REMOVE 1/8" NPTF PLUG AND
SUPPLY 50-150 PSI TO 1/8" NPTF PILOT PORT IN ADAPTOR.

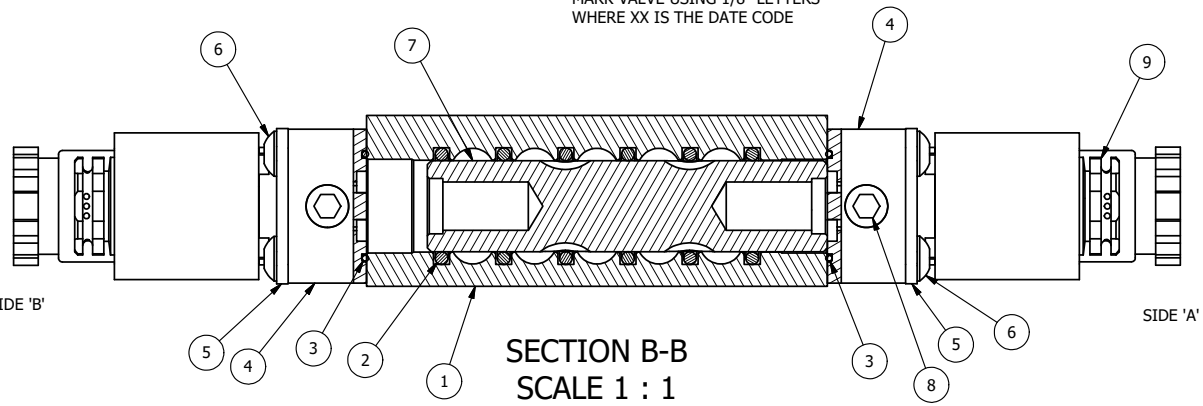

SECTION B-B
SCALE 1 : 1
VIEW FROM 3 PORT SIDE

FLG	QTY	PART NO	DESCRIPTION
9	2	V-562	NUT, SOLENOID, SIDE EXHAUST
8	2	V-19-SS	PLUG, SOCKET PIPE 1/8"-27 NPT, 7/8 TAPER, PLAIN, FLUSH SEAL, STAINLESS STEEL
7	1	S3R	SPOOL - SOLID, STANDARD, 2 POS, CLSD CTR, 1/4" & 3/8" VALVE
6	8	V-584-SS	SCREW, 10-24 X 1, BUTTON HEAD SOCKET CAP, 18-8 OR 303 SS
5	2	SEC3-7	PLATE, RE-INFORCEMENT, SOLENOID, STAMPED, 304 STAINLESS
4	2	V-564	SYSTEM 8 INTRINSICALLY SAFE SOLENOID OPERATOR.
3	2	EMG3	GASKET - END MOUNT SOLENOID, BUNA-N, 1/4" & 3/8" VALVES
2	6	V-39	O-RING, VITON, STD BODY, 1/4" & 3/8" VALVES
1	1	ZB2-1	BODY - BRASS, UPPER PILOTS (BUTTON BLEEDER), 1/4" SIDE PORT VALVE

NOTES:
1) ALWAYS GIVE VALVE MODEL AND PART NUMBER WHEN ORDERING PARTS.

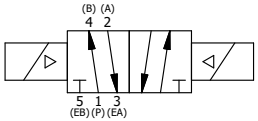

LIMITS ON DIMENSIONS UNLESS OTHERWISE SPECIFIED
2-PL DECIMAL ± .01
3-PL DECIMAL ± .005
FRACTIONAL ± 1/64
ANGULAR ± 1/2'

AAA PRODUCTS INTERNATIONAL
7114 Harry Hines Blvd
Dallas, TX 75235

DRAWN: RMcKenna	DATE: 3/24/2016	CHECKED: KWaite	DATE: 3/24/2016
SCALE: 1 : 1	SHEET: 1 OF 1	RELEASED: HWomack	DATE: 3/24/2016

TITLE: 1/4" SIDE PORT, DBL SOL, 2 POS, FRCTN POS, SOL RTRN, BRASS & SS, INTR SAFE, 24VDC, SIDE VENT

PART NO.: ZESS2AC 24VDC

REV.:

THE INFORMATION CONTAINED WITHIN THIS DOCUMENT IS PROPRIETARY TO AAA PRODUCTS AND MAY NOT BE DISCLOSED WITHOUT PRIOR WRITTEN CONSENT

D:\Engineering\Product\Valve\Assembly\Standard\SS\DWG\ZESS2AC 24VDC.dw